NVM 2 Version 1

OPERATOR'S MANUAL

V 0.1

7/30/2024

OPERATOR'S MANUAL

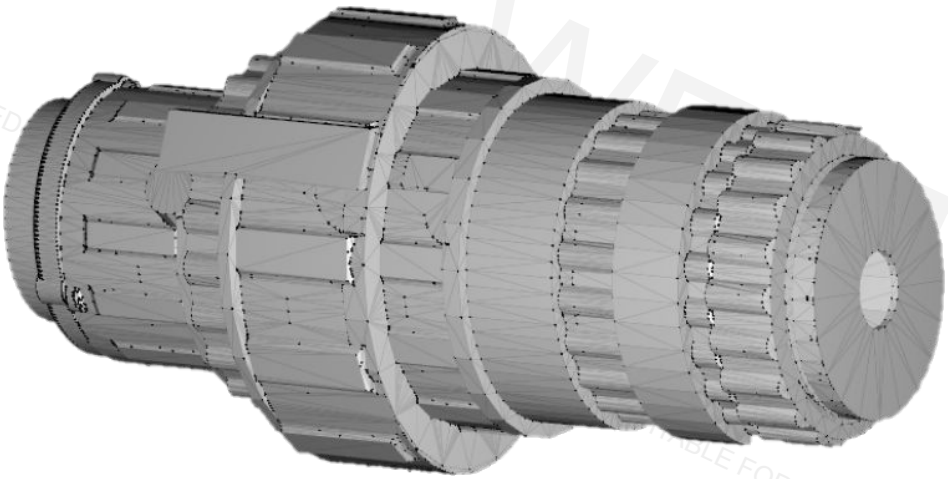

NIGHT VISION MONOCULAR 2 VERSION 1 "BEACHVISION"

"NVM 2 v.1"

DISTRIBUTION STATEMENT NVM 2 - Distribution authorized by **WEST TEC LLC** or Hanssen Hassett. This publication is required for administration and operational purposes, as determined 30 July 2024. Other requests for this document shall be referred to either: Bob West, Brendan West, & Hanssen Hassett all by respective West Tec LLC emails & contact information: ...

DESTRUCTION NOTICE - For unclassified, limited documents, destroy by any method that will prevent disclosure of contents or reconstruction of the document.

WARNING

Do not carry batteries in pockets containing metal objects such as coins, keys, etc. Metal objects can cause the batteries to short circuit and become very hot.

WARNING

EQUIPMENT LIMITATIONS To avoid personal injury and property damage when using the NVM 2 carefully read and understand the following safety precautions.

• The NVM 2 requires some ambient (moonlight, starlight, or artificial light, etc.) to operate. The level of performance depends on the level of light.

• Night light is reduced by passing cloud cover, while operating under trees, in building shadows, etc.

• The NVM 2 is less effective viewing into shadows and other darkened areas.

• The NVM 2 is less effective through rain, fog, sleet, snow, smoke, and other reflective material. • The NVM 2 will not “see” through dense smoke.

SYNOPSIS

The Night Vision Monocular 2, also known as the “beachvision” monocular is designed for use under low light & nighttime conditions within the vicinity of sea spray and moisture from salt water.

The NVM 2 is mounted via M5 bolt to a J arm or bridge night vision attachment. (e.g. pvs 14 J arm, PVS 28 bridge mount)

The NVM 2’s most modern qualities derives from the addition of 3 new technologies:

1. interchangeable 32mm lens filters for both objective lens & eyepiece

2. 34mm diameter eyecup attachment capabilities

3. Focusable eyepiece

However the most important technology of the NVM 2 is its new ground up designed housing, completely different from its predecessor, it boasts sea spray resistance & threaded tube technology.

Capabilities

The NVM 2 version 1 has a specially designed digital night vision housing made for the Runcam Night Eagle 3, & the adafruit 1.5” TFT display & PCB board.

Camera Specs
(shortened)

Image Sensor	1/2.8”2MP
horizontal resolution	1500TVL
lens	16:9 Depth of field of view: 125° Horizontal: 107° Vertical: 56° Or 4:3 Depth of field of view: 97° Horizontal: 75° Vertical: 56°
signal system	NTSC/PAL switchable
Color	Black, White
net weight	8.5 grams

Image Specs
(shortened)

Resolution	160 RGB x 240

HOUSING DIAGRAM

The NVM 2 v. 1 housing consists of 8 parts

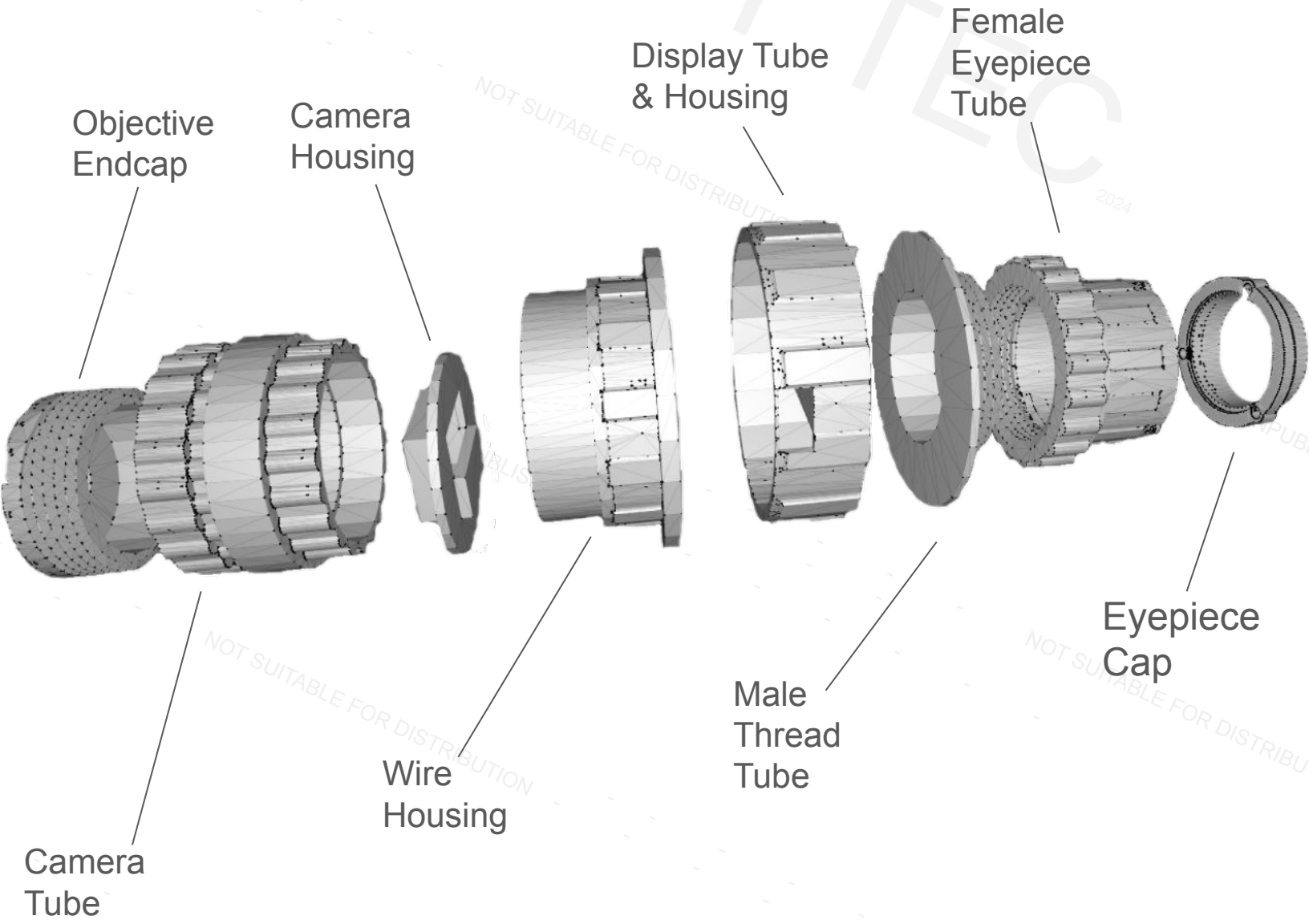

DETACHABLE PARTS

Only two three parts are interchangeable without invasive maintenance

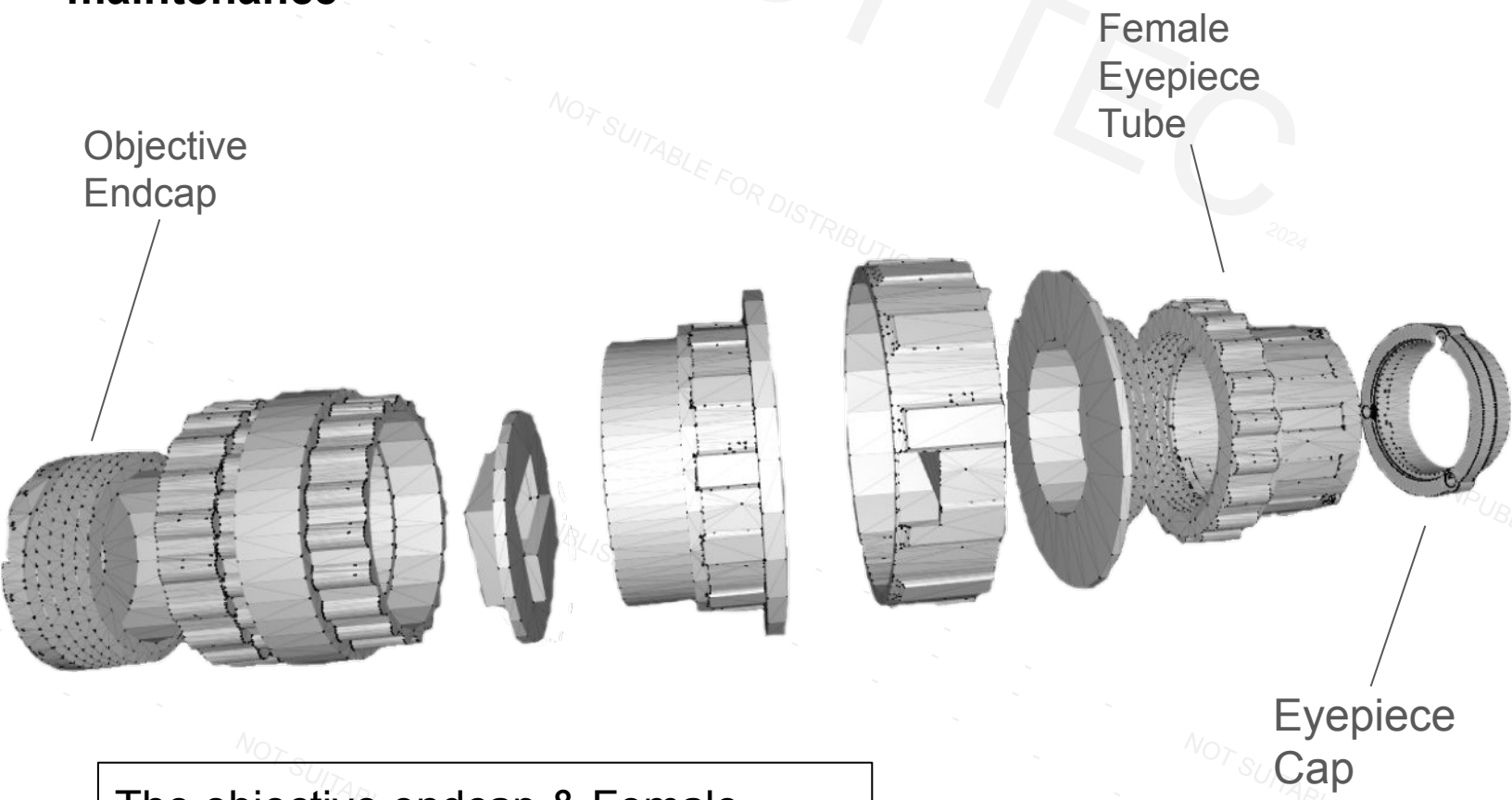

The objective endcap & Female eyepiece Tube are removable via threaded tube

The eyepiece Cap can be unscrewed via the 3 Phillips Head 2 bolts

OBJECTIVE ENDCAP FUNCTIONS

The objective endcap is designed to be interchangeable with different Inside diameter objective endcaps for lens filters.

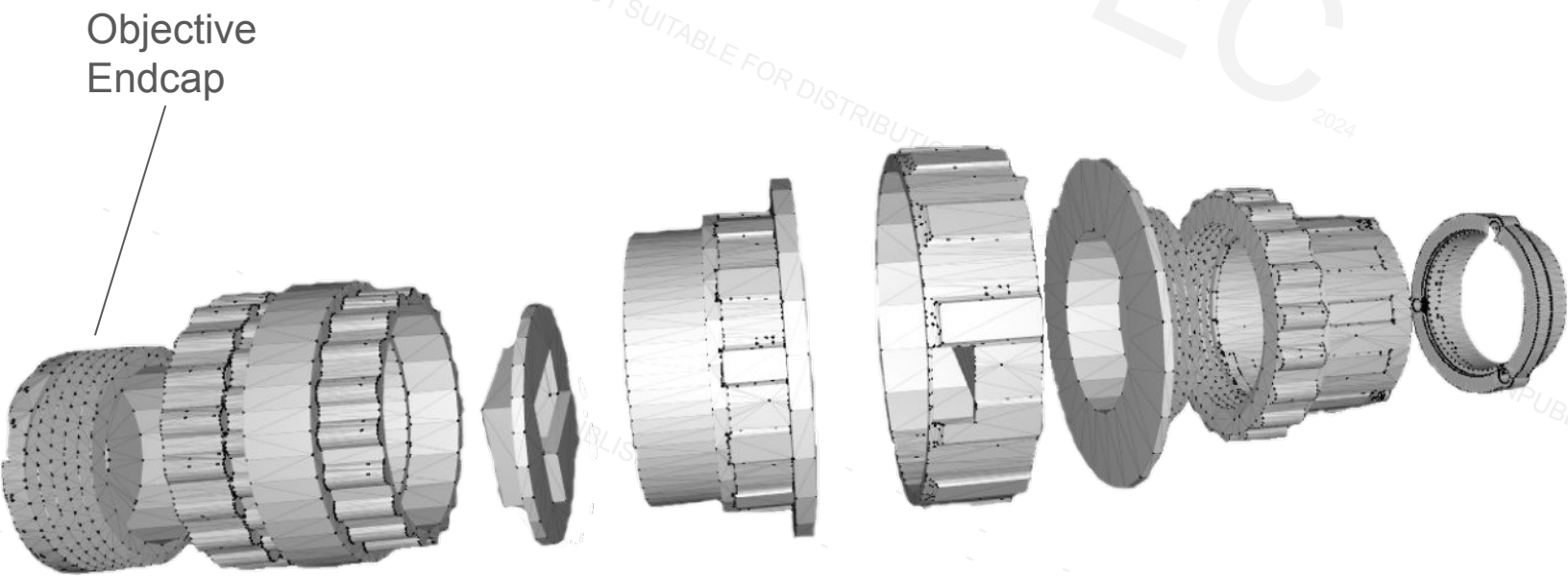

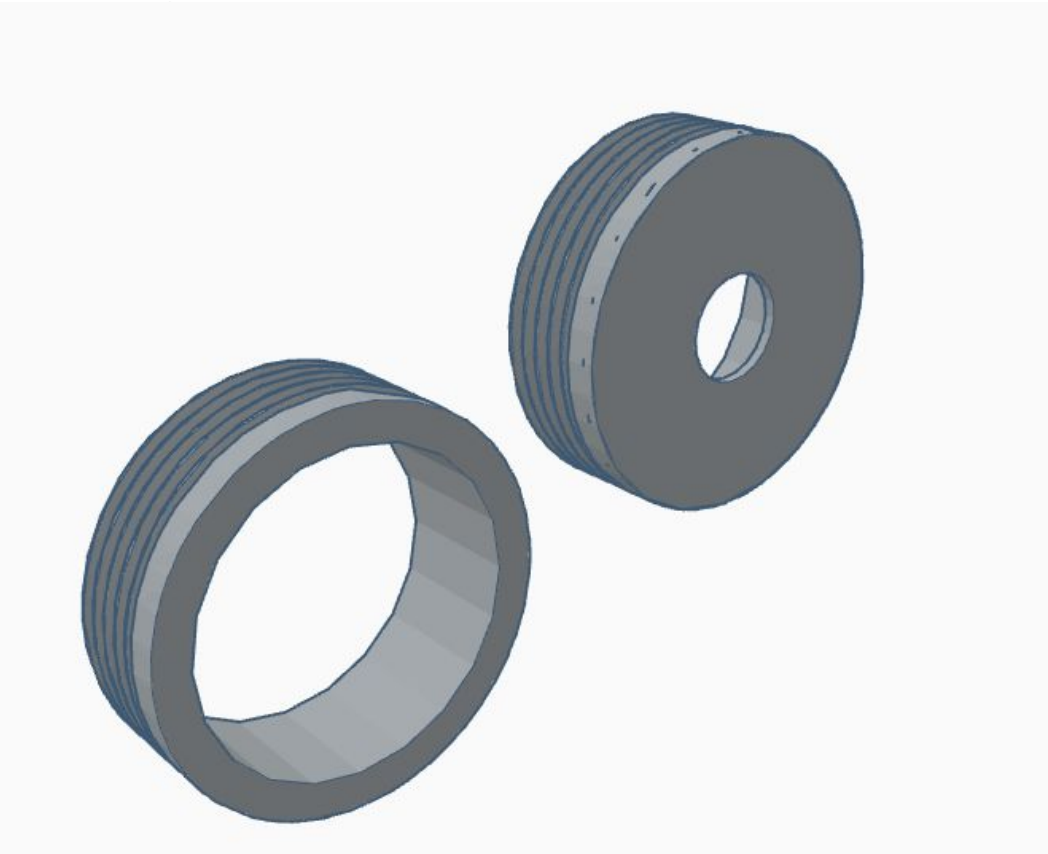

Two different endcaps (left)

Simply unscrew the endcap with your hands to remove, and screw back in replacement endcap, **(do not over tighten, you may damage camera)**

EYEPIECE FUNCTIONS

The eyepiece is on a threaded tube allowing you to focus the eyepiece lens by turning the eyepiece with your hands.

To decrease distance from lens to display: Turn Clockwise

To increase distance from lens to display: Turn Counter-Clockwise

The Eyepiece extends out approx 5mm on a 34mm diameter tube. This tube is compatible with 34mm inner diameter rubber eyecups.

Simply slide rubber eyecups over tube to attach.

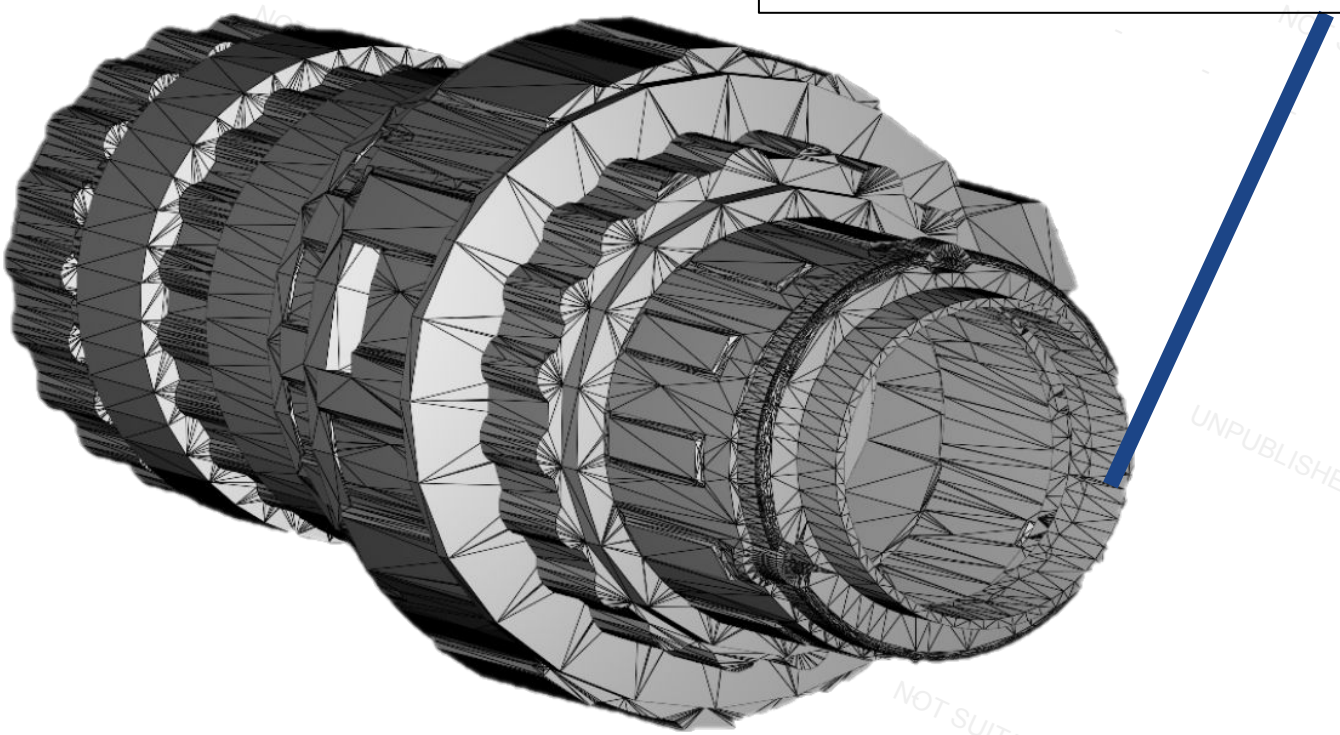

MAINTENANCE

The NVM 2 version 1's housing is designed to be air tight. The remaining parts of the housing that are not interchangeable/detachable are to be soldered together.

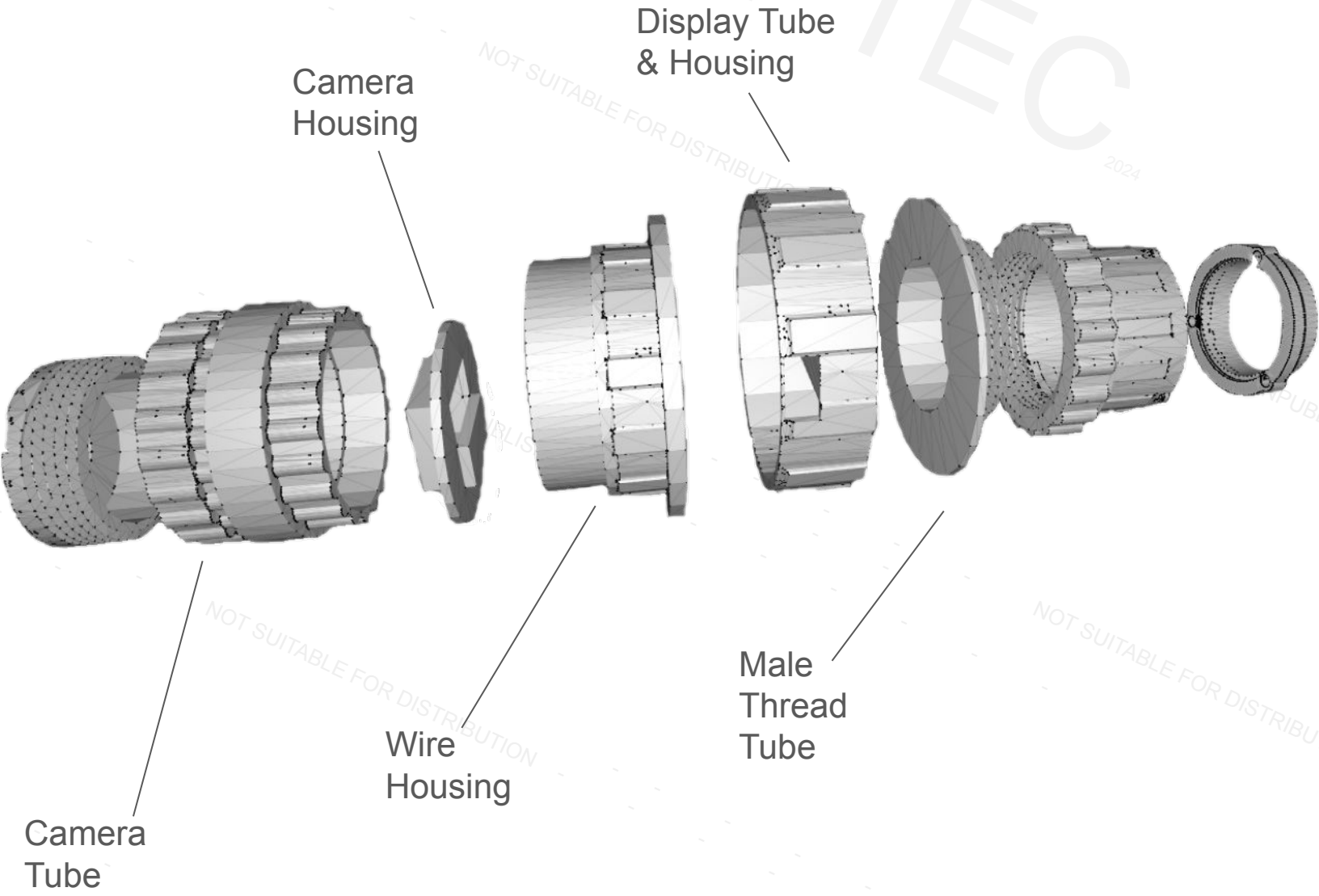

MAINTENANCE

Unfortunately the NVM 2 <u>VERSION 1</u> is not suitable for maintenance. Due to the crude airtight nature of the design & with it being a <u>prototype</u>. However with the right tools, maintenance is possible

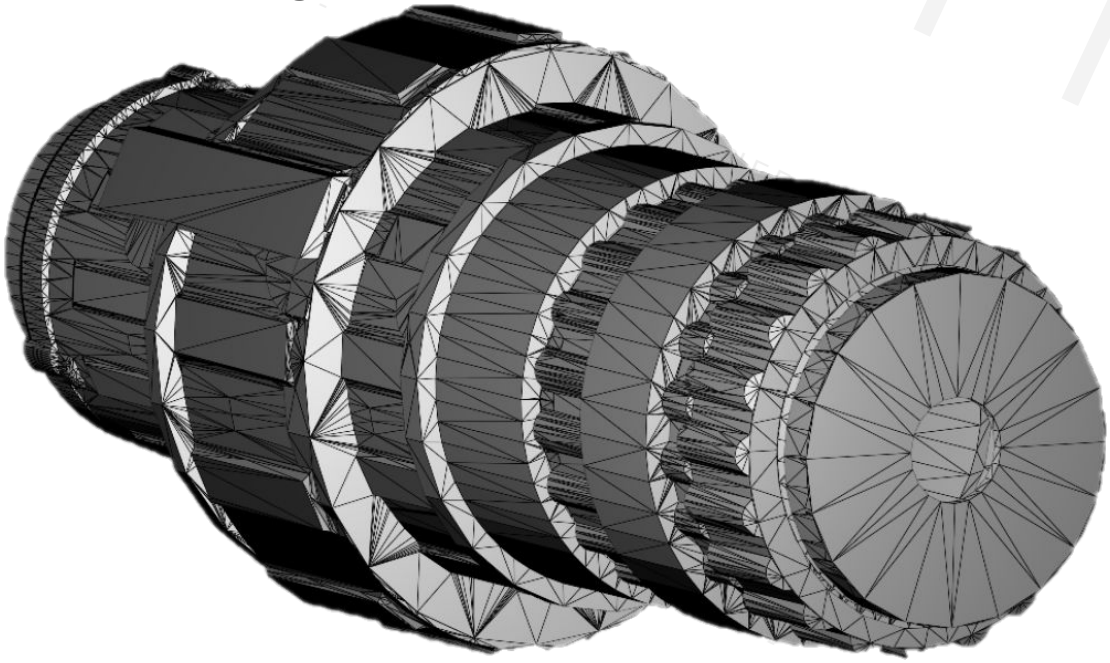

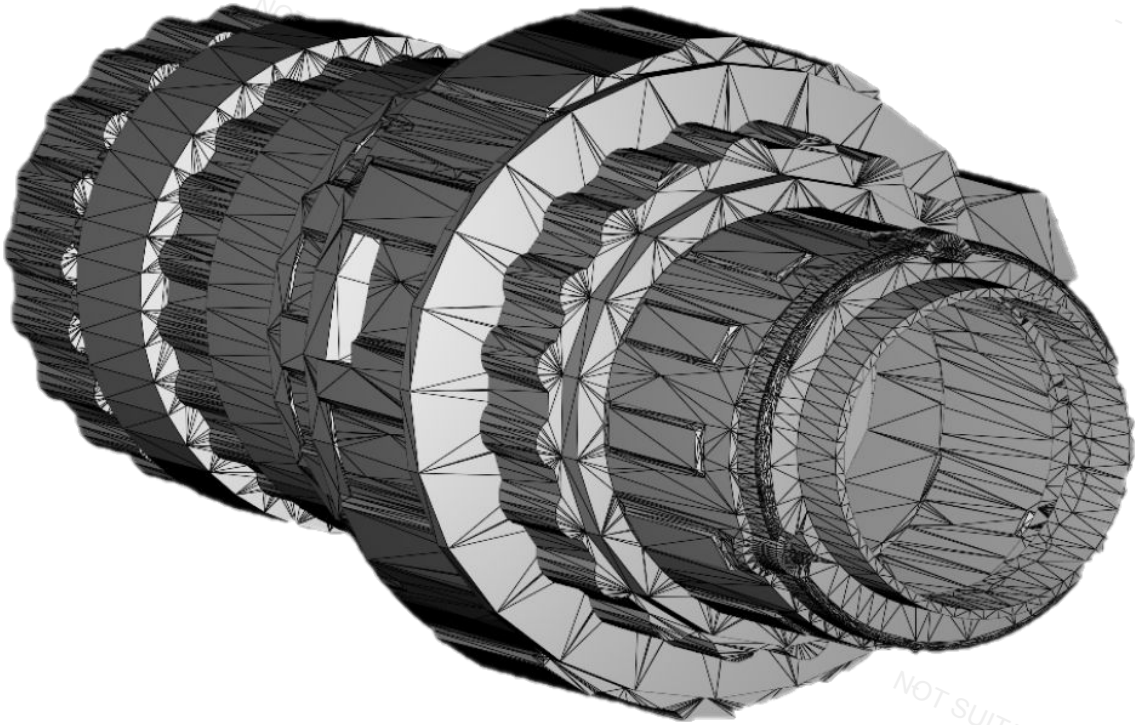

CAMERA MAINTENANCE

The Runcam Night Eagle 3 is placed inside of the "camera Housing" part. The Camera Housing part is a disc with a 19.25mm x 19.25mm box with one open end, and one half opened end, - centered within the disc.

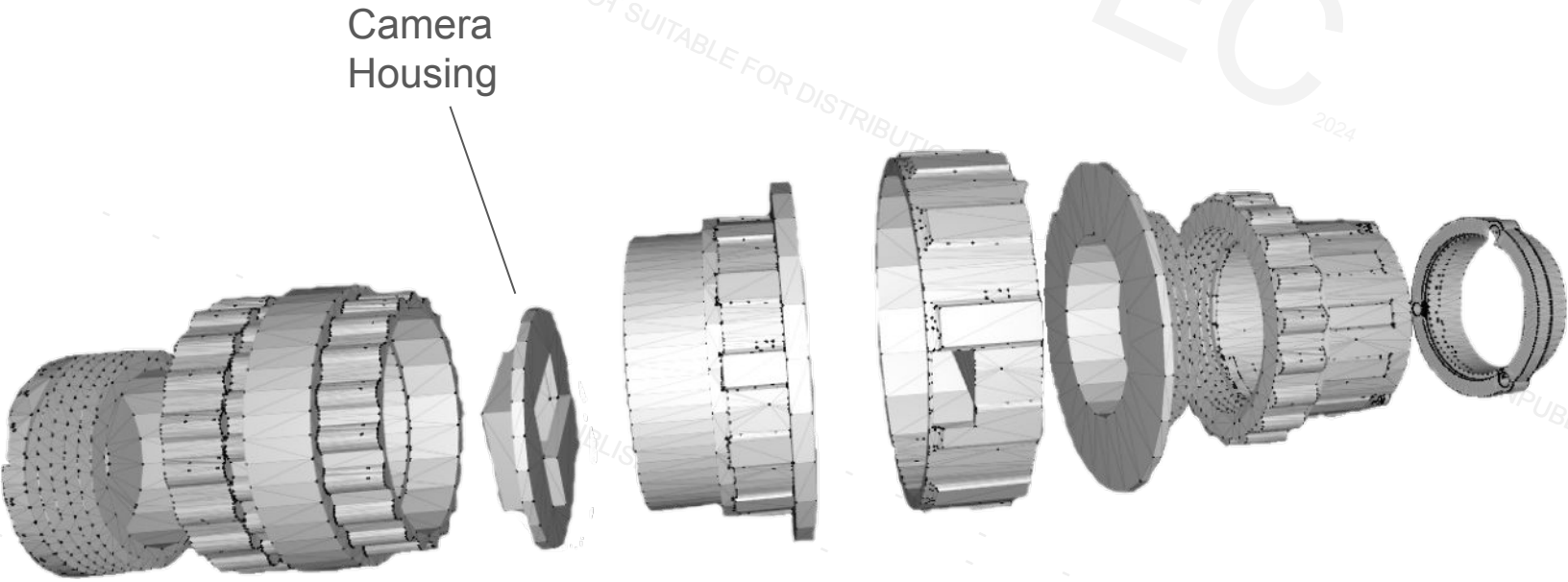

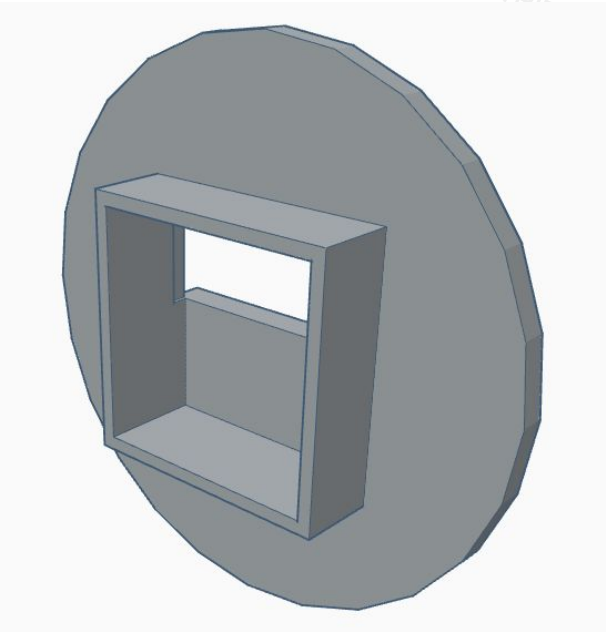

Camera Housing (Left)

CAMERA MAINTENANCE

POSSIBLE FAULTS:

1. **Lost Connection/no signal (**display still working**)**
2. **Broken by Endcap**
3. **Obscured by Endcap**

FOR NUMBER 1. Solder cut through Wire Housing, 4mm up away from Camera Tube. Cut all the way around circumference to detach wire housing from Camera Housing and tube…

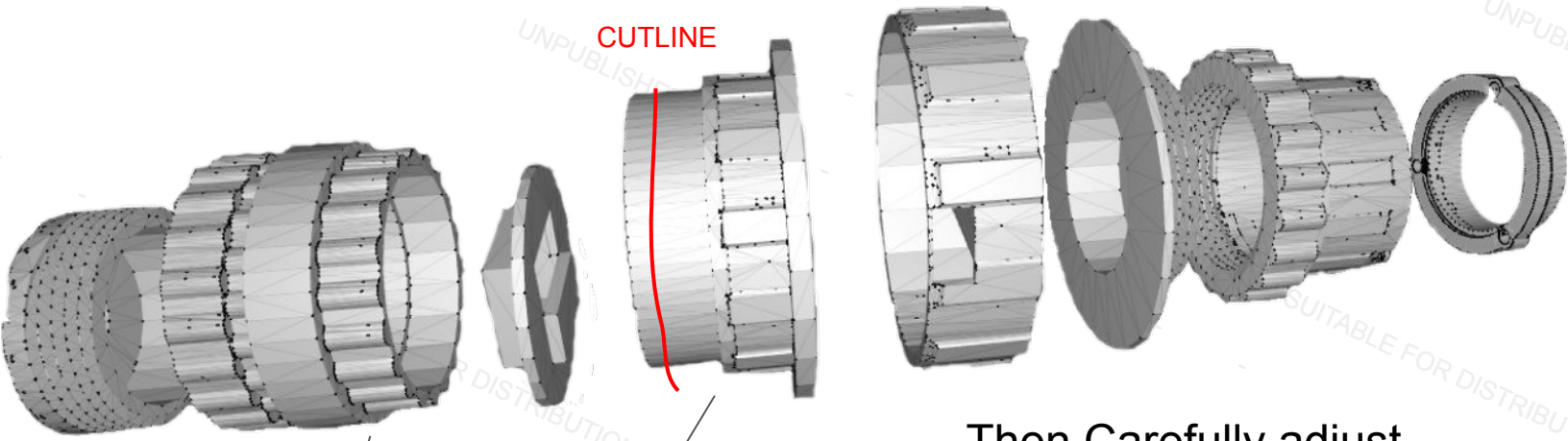

Then Carefully adjust cables with needle nose pliers so that they tightly fit into Runcam Night Eagle 3 backside port

Wire Housing

Camera Tube

CAMERA MAINTENANCE

FOR NUMBER 1. CONT…
Inspect that all wires are properly connected and insulated. And no wires are loose/not connected.

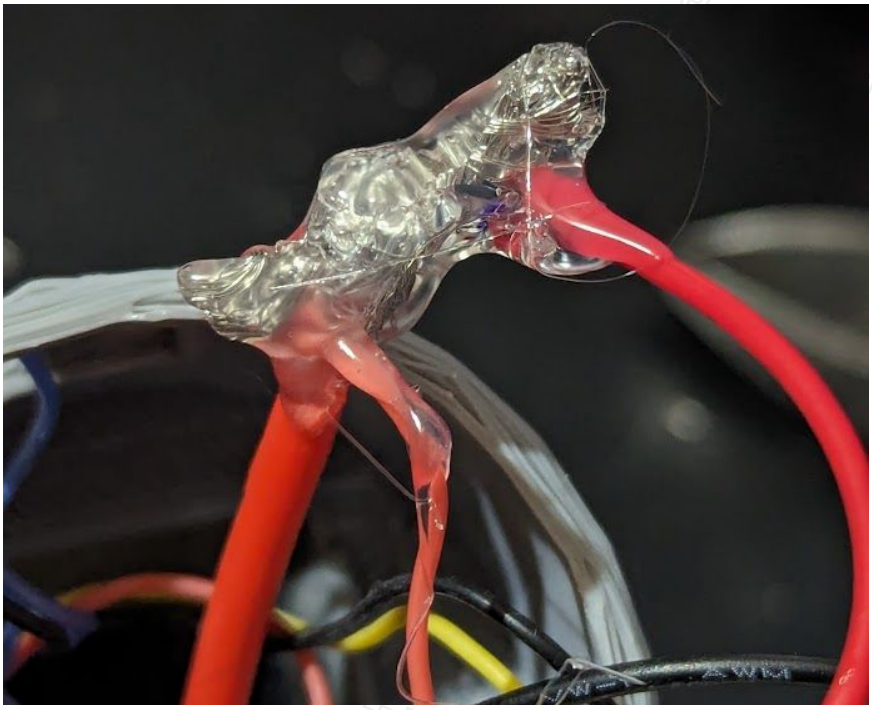

IMAGE LEFT SHOWS PROPER POWER CONNECTION

If all wires are good, proceed with fingertips or needle nose pliers to press onto each connection. Sometimes a connection is poor and wires just need to be pressed together to touch. If fix, reglue those wires together to ensure proper connection.

If no fix, check with fingertips if the Runcam Night Eagle 3 is warm/hot, if so Camera is receiving power and issue is terminal or related to video connection to the display. See page 14 for Display Maintenance.

CAMERA MAINTENANCE

For Number 2

Unscrew Objective Endcap and look for visible damage or obstruction.

For Number 3

Unscrew Objective Endcap and look for visible damage or obstruction, test NVM 2 without the endcap.

Sometimes a lens filter on the endcap may be too dark. Or a small inner diameter endcap was creating a tunnel vision field of view and needs to be discarded

NEVER OVERTIGHTEN OBJECTIVE ENDCAP AS THIS MAY CRUSH THE CAMERA!

DISPLAY MAINTENANCE

POSSIBLE FAULTS:

1. **Lost Connection/no signal**
2. **Damaged/dead by Display**

For Number 1. Solder cut through Wire Housing, 4mm up away from Camera Tube. Cut all the way around circumference to detach wire housing from Camera Housing and tube. Then solder cut at cut line 2 where Display tube meets Wire Housing

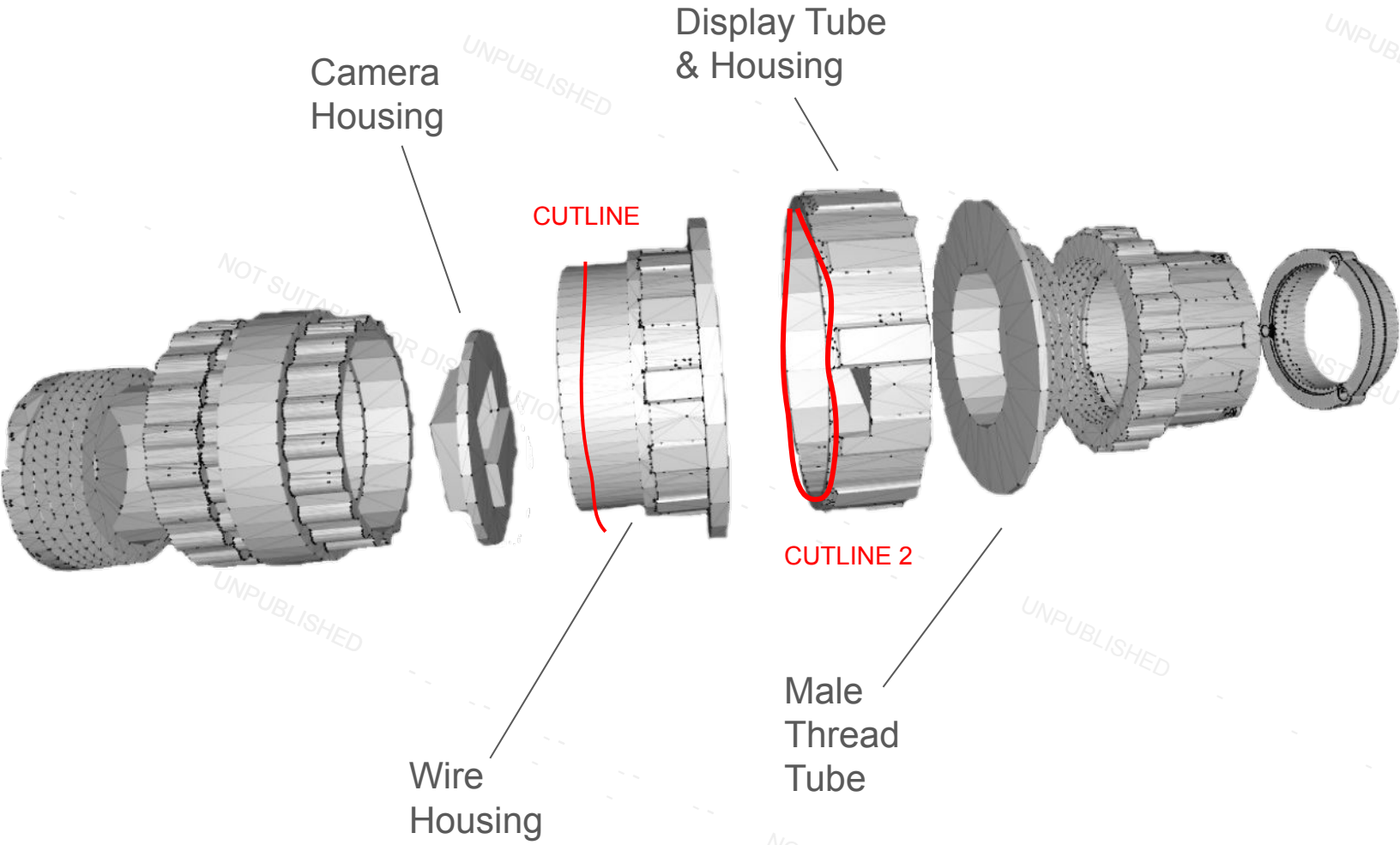

DISPLAY MAINTENANCE

FOR NUMBER 1. CONT…
Inspect that all wires are properly connected and insulated. And no wires are loose/not connected.

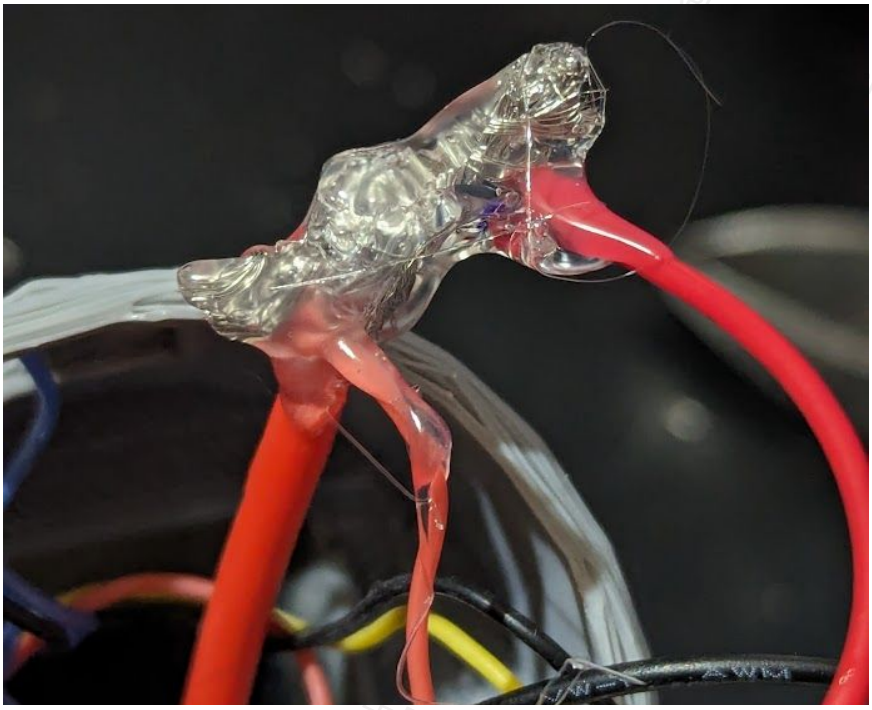

IMAGE LEFT SHOWS PROPER POWER CONNECTION

If all wires are good, proceed with fingertips or needle nose pliers to press onto each connection. Sometimes a connection is poor and wires just need to be pressed together to touch. If fix, reglue those wires together to ensure proper connection.

If no fix, check with fingertips if the Runcam Night Eagle 3 is warm/hot, if so Camera is receiving power and issue is related to video connection to the display.

DISPLAY MAINTENANCE

FOR NUMBER 1. CONT…

Ensure wires are tightly
Plugged into PCB, push in
With fingertips or needle nose
pliers

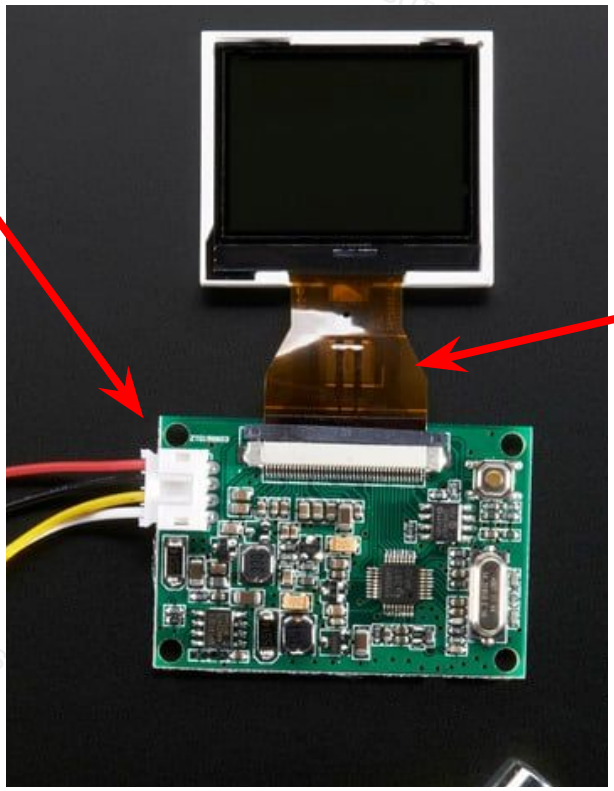

Check to see if
there are any
tears in the flex
connector

If torn, entire
display needs to
be replaced, or at
least flex
connector or
sourceable
standalone

If still no fix, check with page 11 for camera maintenance. If still no fix assume display is damaged and needs replacement.

NVM 2 Version 1

OPERATOR'S MANUAL

V 0.1

7/30/2024

By Hanssen Hassett

RECOMMENDED CHANGES TO EQUIPMENT TECHNICAL PUBLICATIONS

THEN...JOT DOWN THE DOPE ABOUT IT ON THIS FORM.

Screenshot AND EMAIL TO: WESTTECSUPPORT@...

SOMETHING WRONG WITH PUBLICATION

FROM: (PRINT YOUR UNIT'S COMPLETE ADDRESS)

DATE SENT

PUBLICATION NUMBER	PUBLICATION DATE	PUBLICATION TITLE

BE EXACT PIN-POINT WHERE IT IS

PAGE NO.	PARA-GRAPH	FIGURE NO.	TABLE NO.

IN THIS SPACE, TELL WHAT IS WRONG AND WHAT SHOULD BE DONE ABOUT IT.

PRINTED NAME, GRADE OR TITLE AND TELEPHONE NUMBER	SIGN HERE

TEAR ALONG PERFORATED LINE